TECHNICAL SPECIFICATIONS

Senstar LM100 Luminaire AP

E8FG0110

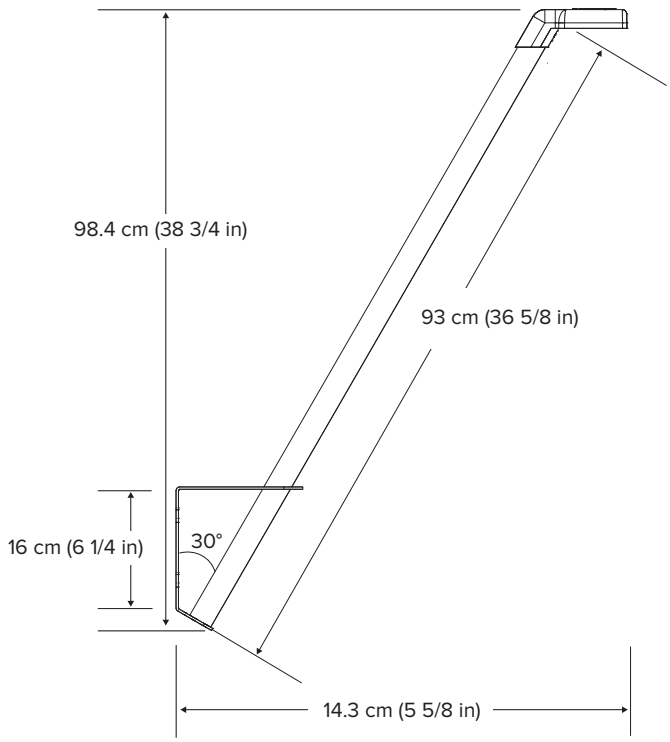

Description

The Senstar LM100 Luminaire AP provides high-quality LED illumination directed downwards along the fence line. The light head contains an accelerometer-based intrusion detection sensor. The luminaire is attached directly to the top of the fence post via stainless steel clamps.

The Luminaire AP communicates with nearby luminaires over an encrypted wireless mesh network. Communication with the Senstar LM100 Gateway is handled by an RS-485 connection.

Physical Specifications

- Dimensions: (H/D/W): 98.4 x 14.3 x 5.1 cm (38 3/4 x 5 5/8 x 2 in)
- Mounting arm diameter (OD): 3.1 cm (1 1/4 in)
- Weight: 728 g (1.6 lbs)
- Cable entry point with plug
- Rugged UV-rated ASA and polycarbonate housing (NEMA Type 3S)
- Welded aluminum mounting arm with polyester power black finish

LED Specifications

- Brightness: 53 lux/luminaire
- Correlated color temperature (CCT): 6500 K (nominal)
- Coverage pattern: 120 degrees

RF Specifications

- 2.4 GHz 128-bit AES encrypted communications link
- Wireless range: 30 m (100 ft)

Power Specifications

- Input: 12 to 48 VDC
- Consumption: 2.5W

Environmental Specifications

- Operating temperature: –40 to 70 °C (–40 to 158 °F)
- Humidity: 100% (condensing)

Regulatory Compliance

- FCC, CE (including RoHS 2), REACH, UL

See the Senstar LM100 Datasheet for a full system description.

info@senstar.com • senstar.com

TS-E8-002-IN-R2-11/18. Copyright © 2018. All rights reserved. Features and specifications are subject to change without notice. The Senstar name and logo are registered trademarks of Senstar Corporation.